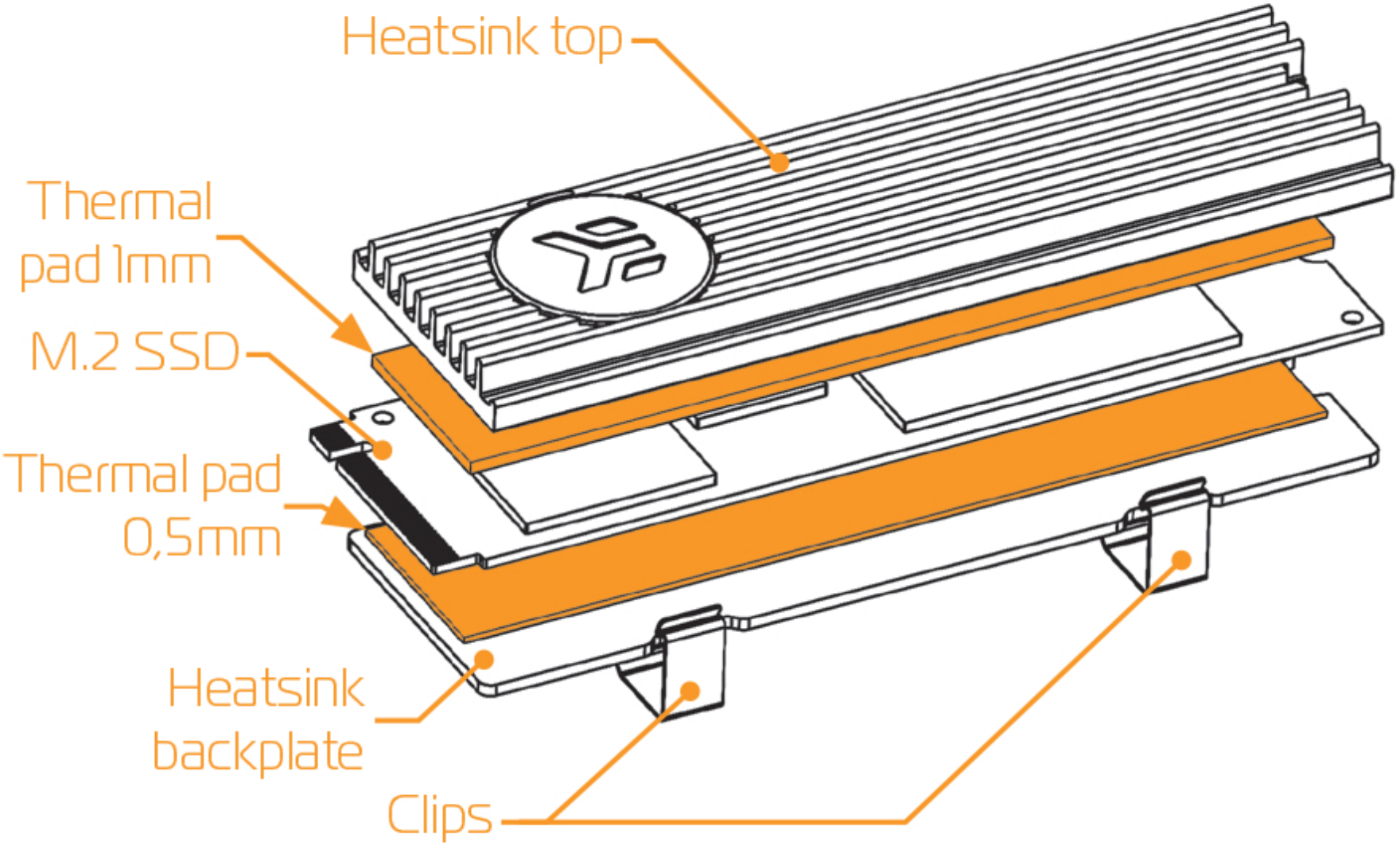
Heatsink top
Thermal pad 1mm
M.2 SSD
Thermal pad 0,5mm
Heatsink backplate
Clips